TRIDONIC

Driver LC 90W 200–800mA flexC NF h16 EXC4

excite series

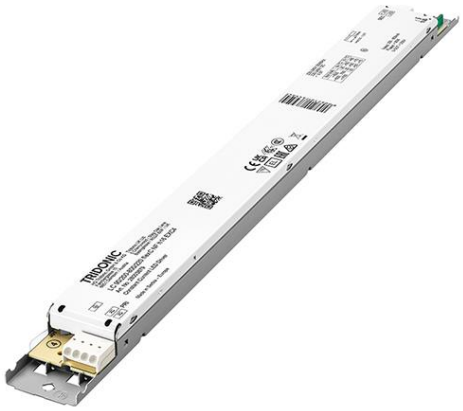

Product description

_ New article (28005037) with updated NFC interface for compatibility with ID ECCO Smart 2D-TR
_ Constant current LED driver for luminaire installation
_ For class I luminaires
_ Adjustable output current between 200 and 800 mA via NFC
_ Max. output power 90 W
_ Up to 95 % efficiency
_ Nominal lifetime up to 100,000 h
_ 5 years guarantee (conditions at https://www.tridonic.com/en/int/services/manufacturer-guarantee-conditions)

Housing properties

_ Low profile metal casing with white cover
_ Only 16 mm housing height
_ Type of protection IP20

Interfaces

_ Near field communication (NFC)
_ Terminal blocks: 0° push terminals

Functions

_ Adjustable output current in 1-mA-steps (NFC)
_ Constant light output function (eCLO)
_ Protective features (overtemperature, short-circuit, overload, no-load)
_ Intelligent Voltage Guard (overvoltage and undervoltage monitoring)
_ Suitable for emergency escape lighting systems acc. to EN 50172

Benefits

_ Flexible configuration via companionSUITE
_ Support NFC multiple programming (full carton box)
_ Application-oriented operating window for maximum compatibility
_ Best energy savings due to high efficiency
_ Reliability proven by lifetime up to 100,000 h and 5 years guarantee (conditions at https://www.tridonic.com/en/int/services/manufacturer-guarantee-conditions)

Typical applications

_ For linear/area lighting in office applications

Website

http://www.tridonic.com/28003879

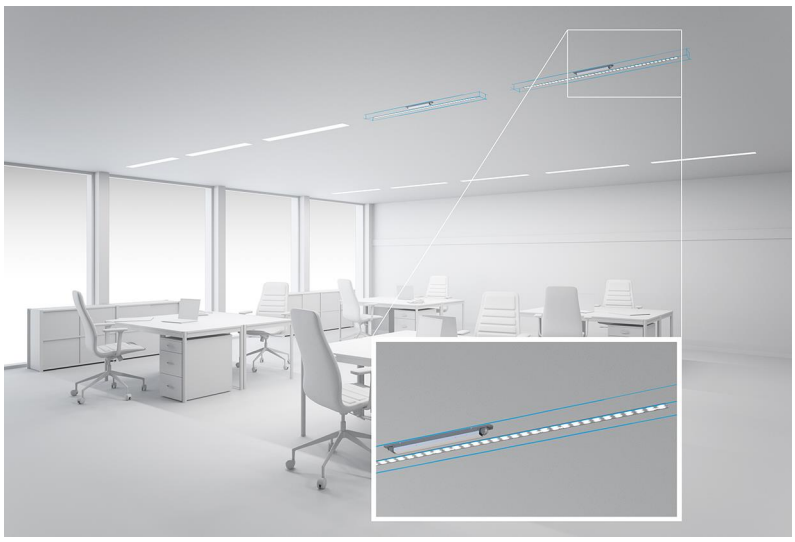

Linear | High bay | Decorative | Downlights | Spotlights | Free-standing | Area | Floor | Wall | Street

Driver LC 90W 200–800mA flexC NF h16 EXC4

excite series

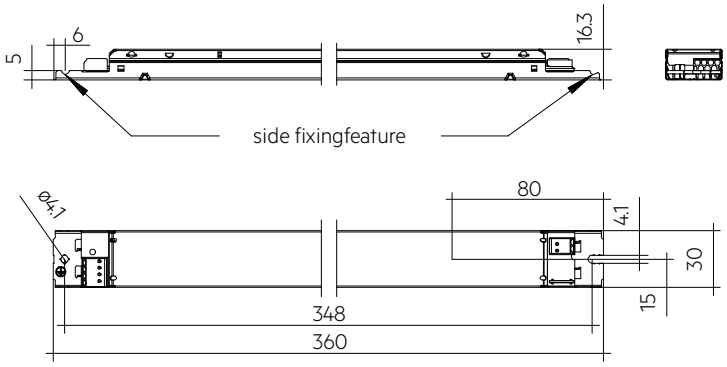

Ordering data

Type	Article number	Packaging, carton	Packaging, pallet	Weight per pc.
LC 90/200-800/220 flexC NF h16 EXC4	**28003879**	10 pc(s).	950 pc(s).	0.199 kg
LC 90/200-800/220 flexC NF h16 EXC4	**28005037**	10 pc(s).	950 pc(s).	0.197 kg

Technical data

Rated supply voltage	220 – 240 V
AC voltage range	198 – 264 V
DC voltage range	176 – 280 V
Mains frequency	0 / 50 / 60 Hz
Overvoltage protection	320 V AC, 48 h
Typ. rated current (at 230 V, 50 Hz, full load) ①	450 mA
Typ. current (220 V, 0 Hz, full load) ①	440 mA
Leakage current (at 230 V, 50 Hz, full load) ①	< 500 µA
Max. input power	97 W
Output power range (P_rated)	9 – 90 W
Typ. efficiency (at 230 V, 50 Hz, full load) ①	95 %
λ (at 230 V, 50 Hz, full load)	0.97
λ (over full operating range)	0.61C – 0.97
Typ. input current in no-load operation	47.3 mA
Typ. input power in no-load operation	0.74 W
In-rush current (peak / duration)	34.2 A / 188 µs
THD (at 230 V, 50 Hz, full load)	< 10 %
Starting time (at 230 V, 50 Hz, full load)	< 300 ms
Starting time (DC mode)	< 300 ms
Switchover time (AC/DC) ②	< 300 ms
Turn off time (at 230 V, 50 Hz, full load)	< 30 ms
Output current tolerance ③	± 5 %
Max. output current peak (non-repetitive)	≤ output current + 90 %
Output LF current ripple (< 120 Hz)	± 1.5 %
Output P_ST_LM (at full load)	≤ 1
Output SVM (at full load)	≤ 0.4
Max. output voltage (U-OUT)	250 V
Mains surge capability (between L - N)	1 kV
Mains surge capability (between L/N - PE)	2 kV
Burst / surge peaks output side against PE	≤ 2.5 kV
Type of protection	IP20
Lifetime	up to 100,000 h
Guarantee (conditions at www.tridonic.com)	5 Year(s)
Dimensions L x W x H	360 x 30 x 16.3 mm

Approval marks

IP20 110 EL RoHS

Standards

EN 55015, EN 61000-3-2, EN 61000-3-3, EN 61347-1, EN 61347-2-13, EN 62384, EN 61547, according to EN 50172, according to EN 60598-2-22

Specific technical data

Type	Output current③④	Min. output voltage	Max. output voltage	Max. output power	Typ. power consumption (at 230 V, 50 Hz, full load)	Typ. current consumption (at 230 V, 50 Hz, full load)	tc point max.	Ambient temperature ta
LC 90/200-800/220 flexC NF h16 EXC4	200 mA	45 V	220.0 V	44 W	45.9 W	212 mA	75 °C	-20 … +70 °C
LC 90/200-800/220 flexC NF h16 EXC4	250 mA	45 V	220.0 V	55 W	56.7 W	257 mA	75 °C	-20 … +70 °C
LC 90/200-800/220 flexC NF h16 EXC4	300 mA	45 V	220.0 V	66 W	68.1 W	306 mA	75 °C	-20 … +70 °C
LC 90/200-800/220 flexC NF h16 EXC4	350 mA	45 V	220.0 V	77 W	79.2 W	353 mA	80 °C	-20 … +70 °C
LC 90/200-800/220 flexC NF h16 EXC4	400 mA	45 V	220.0 V	88 W	90.6 W	402 mA	80 °C	-20 … +70 °C
LC 90/200-800/220 flexC NF h16 EXC4	450 mA	45 V	200.0 V	90 W	93.0 W	413 mA	80 °C	-20 … +70 °C
LC 90/200-800/220 flexC NF h16 EXC4	500 mA	45 V	180.0 V	90 W	93.6 W	415 mA	80 °C	-20 … +70 °C
LC 90/200-800/220 flexC NF h16 EXC4	550 mA	45 V	163.6 V	90 W	93.9 W	416 mA	80 °C	-20 … +70 °C
LC 90/200-800/220 flexC NF h16 EXC4	600 mA	45 V	150.0 V	90 W	94.2 W	418 mA	85 °C	-20 … +70 °C
LC 90/200-800/220 flexC NF h16 EXC4	650 mA	45 V	138.5 V	90 W	95.0 W	421 mA	85 °C	-20 … +70 °C
LC 90/200-800/220 flexC NF h16 EXC4	700 mA	45 V	128.6 V	90 W	95.5 W	424 mA	85 °C	-20 … +70 °C
LC 90/200-800/220 flexC NF h16 EXC4	750 mA	45 V	120.0 V	90 W	95.7 W	424 mA	85 °C	-20 … +65 °C
LC 90/200-800/220 flexC NF h16 EXC4	800 mA	45 V	112.5 V	90 W	96.7 W	429 mA	85 °C	-20 … +65 °C
LC 90/200-800/220 flexC NF h16 EXC4	200 mA	45 V	220.0 V	44 W	45.9 W	212 mA	75 °C	-20 … +70 °C
LC 90/200-800/220 flexC NF h16 EXC4	250 mA	45 V	220.0 V	55 W	56.7 W	257 mA	75 °C	-20 … +70 °C
LC 90/200-800/220 flexC NF h16 EXC4	300 mA	45 V	220.0 V	66 W	68.1 W	306 mA	75 °C	-20 … +70 °C
LC 90/200-800/220 flexC NF h16 EXC4	350 mA	45 V	220.0 V	77 W	79.2 W	353 mA	80 °C	-20 … +70 °C
LC 90/200-800/220 flexC NF h16 EXC4	400 mA	45 V	220.0 V	88 W	90.6 W	402 mA	80 °C	-20 … +70 °C
LC 90/200-800/220 flexC NF h16 EXC4	450 mA	45 V	200.0 V	90 W	93.0 W	413 mA	80 °C	-20 … +70 °C
LC 90/200-800/220 flexC NF h16 EXC4	500 mA	45 V	180.0 V	90 W	93.6 W	415 mA	80 °C	-20 … +70 °C
LC 90/200-800/220 flexC NF h16 EXC4	550 mA	45 V	163.6 V	90 W	93.9 W	416 mA	80 °C	-20 … +70 °C
LC 90/200-800/220 flexC NF h16 EXC4	600 mA	45 V	150.0 V	90 W	94.2 W	418 mA	85 °C	-20 … +70 °C
LC 90/200-800/220 flexC NF h16 EXC4	650 mA	45 V	138.5 V	90 W	95.0 W	421 mA	85 °C	-20 … +70 °C
LC 90/200-800/220 flexC NF h16 EXC4	700 mA	45 V	128.6 V	90 W	95.5 W	424 mA	85 °C	-20 … +70 °C
LC 90/200-800/220 flexC NF h16 EXC4	750 mA	45 V	120.0 V	90 W	95.7 W	424 mA	85 °C	-20 … +65 °C
LC 90/200-800/220 flexC NF h16 EXC4	800 mA	45 V	112.5 V	90 W	96.7 W	429 mA	85 °C	-20 … +65 °C

① Depending on the selected output current.
② Valid for immediate change of power supply type otherwise the starting time is valid.
③ Output current is mean value.
④ The table only lists a number of possible operating points but does not cover each single point. The output current can be set within the total value range in 1-mA-steps.

1. Standards

EN 55015
EN 61000-3-2
EN 61000-3-3
EN 61347-1
EN 61347-2-13
EN 62384
EN 61547
According to EN 50172 for use in central battery systems
According to EN 60598-2-22 suitable for emergency lighting installations

2. Thermal details and lifetime

2.1 Expected lifetime

Expected lifetime

Type	Ausgangsstrom	ta	50 °C	55 °C	60 °C	65 °C	70 °C
LC 90/200-800/220 flexC NF h16 EXC4	200 – 300 mA	tc	55 °C	60 °C	65 °C	70 °C	75 °C
		Lifetime	>100,000 h	>100,000 h	>100,000 h	100,000 h	80,000 h
	> 300 – 550 mA	tc	60 °C	65 °C	70 °C	75 °C	80 °C
		Lifetime	>100,000 h	>100,000 h	>100,000 h	70,000 h	50,000 h
	> 550 – 700 mA	tc	65 °C	70 °C	75 °C	80 °C	85 °C
		Lifetime	>100,000 h	>100,000 h	100,000 h	70,000 h	50,000 h
	> 700 mA	tc	70 °C	75 °C	80 °C	85 °C	–
		Lifetime	>100,000 h	100,000 h	70,000 h	50,000 h	–

The LED driver is designed for a lifetime stated above under reference conditions and with a failure probability of less than 10 %.

The relation of tc to ta temperature depends also on the luminaire design.
If the measured tc temperature is approx. 5 K below tc max., ta temperature should be checked and eventually critical components (e.g. ELCAP) measured. Detailed information on request.

3. Installation / wiring

3.1 Circuit diagram

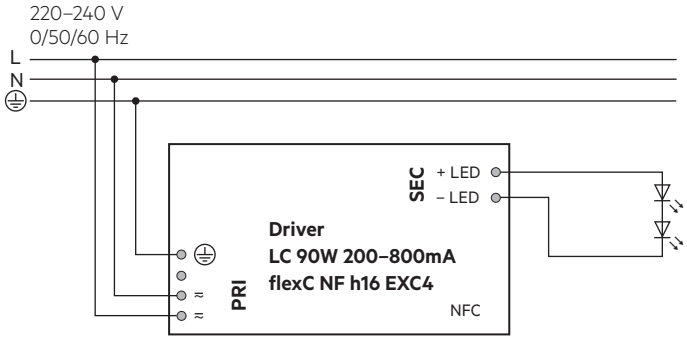

3.2 Wiring type and cross section

For wiring use solid wire from 0.5 – 1.5 mm².
Strip 8 – 9 mm of insulation from the cables to ensure perfect operation of terminals.

LED module/LED driver/supply

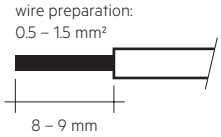

3.3 Loose wiring

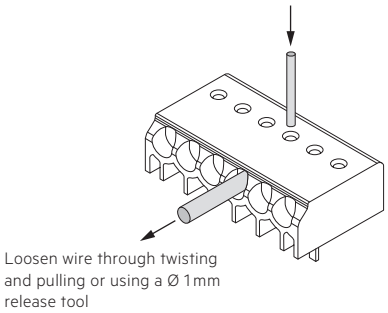

3.4 Wiring guidelines

- Run the secondary lines separately from the mains connections and lines to achieve good EMC performance.
- The max. secondary cable length is 2 m (4 m circuit).
- For good EMC performance, keep the LED wiring as short as possible.
- Secondary switching is not permitted.
- The LED driver has no inverse-polarity protection on the secondary side. Wrong polarity can damage LED modules with no inverse-polarity protection.
- Wrong wiring of the LED driver can lead to malfunction or irreparable damage.
- To avoid damage of the Driver, the wiring must be protected against short circuits to earth (sharp edged metal parts, metal cable clips, louver, etc.).

3.5 Hot plug-in

Hot plug-in is not supported due to residual output voltage of > 0 V up to mains voltage. Danger to life.
When connecting an LED load, restart the device to activate the LED output. This can be done via mains reset.

3.6 Earth connection

Suitable for luminaires of protection class I only.
The earth connection is conducted as protection earth (PE).
The LED driver can be earthed via earth terminal or metal housing.

4. Electrical values

4.1 Operating window

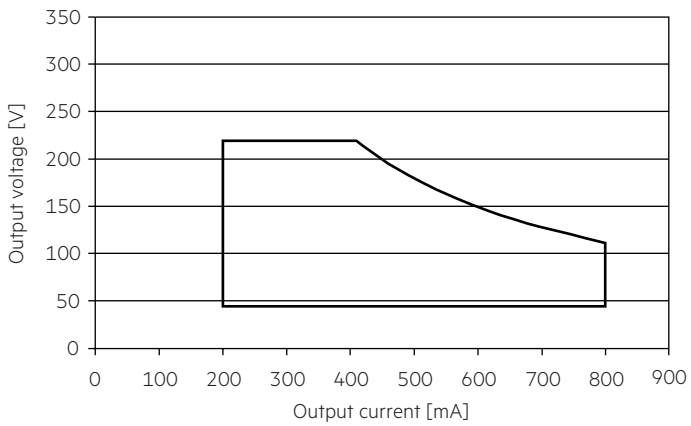

Make sure that the LED driver is operated within the given window under all operating conditions. Coming below the specified minimum output voltage of the LED driver may cause the device to shut-down.

Make sure that the LED driver is operated within the given window under all operating conditions. Special attention needs to be paid at dimming and DC emergency operation as the forward voltage of the connected LED modules varies with the dimming level, due to the implemented amplitude dimming technology. Coming below the specified minimum output voltage of the LED driver may cause the device to shut-down.
See chapter “6.3 Light level in DC operation” for more information.

4.2 Efficiency vs load

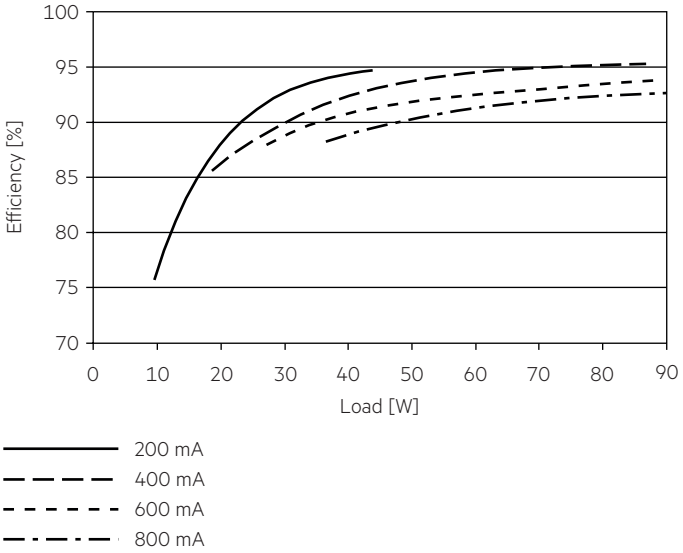

4.3 Power factor vs load

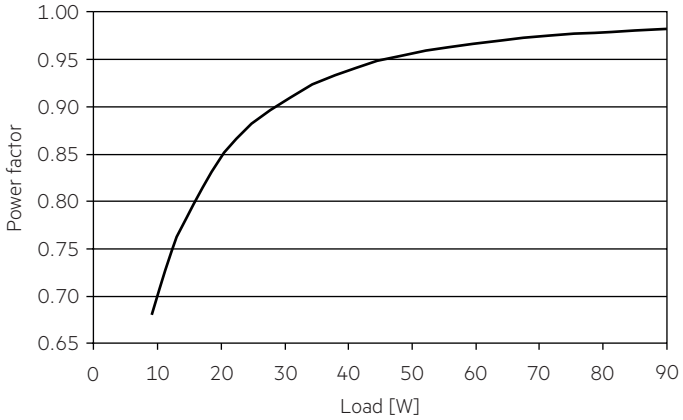

4.4 THD vs load (without harmonic < 5 mA or 0.6 % of the input current)

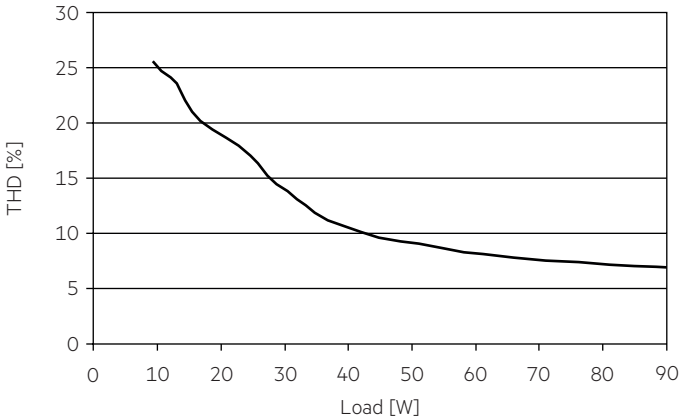

100 % load corresponds to the max. output power (full load) according to the table on page 2.

4.5 Maximum loading of automatic circuit breakers in relation to inrush current

Automatic circuit breaker type	C10	C13	C16	C20	B10	B13	B16	B20	Inrush current	
Installation Ø	1.5 mm²	1.5 mm²	2.5 mm²	2.5 mm²	1.5 mm²	1.5 mm²	2.5 mm²	2.5 mm²	I_{max}	time
LC 90/200-800/220 flexC NF h16 EXC4	18	25	30	38	11	15	18	23	34.2 A	188 µs

These are max. values calculated out of inrush current! Please consider not to exceed the maximum rated continuous current of the circuit breaker.
Calculation uses typical values from ABB series S200 as a reference.
Actual values may differ due to used circuit breaker types and installation environment.

4.6 Harmonic distortion in the mains supply (at 230 V / 50 Hz and full load) in %

	THD	3.	5.	7.	9.	11.
LC 90/200-800/220 flexC NF h16 EXC4	< 10	< 10	< 5	< 5	< 5	< 3

Acc. to 61000-3-2. Harmonics < 5 mA or < 0.6 % (whatever is greater) of the input current are not considered for calculation of THD.

5. Software / Programming / Interfaces

5.1 Software / programming

With appropriate software and interface different functions can be activated and various parameters can be configured in the LED driver.
The Driver supports the following software and interfaces:

Software for configuration:
- companionSUITE (deviceGENERATOR, deviceCONFIGURATOR, deviceANALYSER, 4service NFC app)

Interfaces for data transfer:
- NFC

5.2 Nearfield communication (NFC)

The NFC Interface allows wireless communication with the LED driver.
This interface offers the option to write configuration and to read configuration, errors and events with the companionSUITE.
A correct communication between the LED driver and the NFC antenna can only be guaranteed if the antenna is placed directly on the Driver.
Any material placed between the LED driver and the NFC antenna can cause a deterioration of the communication quality.
After programming the device via NFC power up the device one time for one second till the deviceANALYSER can read out the parameters.
We recommend the use of following NFC antenna:
www.tridonic.com/nfc-readers

With a suitable NFC antenna several devices can be programmed at the same time (NFC multiprogramming).

NFC is complied with ISO/IEC 15963 standard.

Changing parameters via NFC shall be done by qualified engineers only.

6. Functions

⊙ companionSUITE:
NFC
The companionSUITE with deviceGENERATOR, deviceCONFIGURATOR and deviceANALYSER is available via our WEB page:
https://www.tridonic.com/com/en/products/companionsuite.asp

Icon	Function	NFC
	LED current	⊙
	Enhanced constant light output (eCLO)	⊙
	Application Protection	⊙

6.1 LED current

The LED output current must be adapted to the connected LED module. The value is limited by the current range of the respective device.

The output current of the LED driver can be adjusted in a certain range. Adjustment is done by companionSUITE via NFC.

6.2 Enhanced Constant Light Output (eCLO)

With this function the light output of the LED module can be kept equal over the lifetime.
The light output of an LED module reduces over the course of its lifetime. The Constant Light Output (eCLO) function compensates for this natural decline by constantly increasing the output current of the LED driver throughout its lifetime.
Enhanced eCLO shall be achieved by limitation of the LED current at the commissioning of the LED driver and providing a linear interpolation of the current over the time, depending on the data points given by the user.
The user has to insert up to eight pairs of data (time, level).
The output curve is the result of connecting the user data points linear.
Detailed description for eCLO see product manual.
Actual current value could be around 0 – 2.5 % lower than the ideal value between two CLO steps in addition to the output current tolerance.

The minimal CLO starting point is limited by the smallest output current of the LED driver.

6.3 Light level in DC operation

The LED driver is designed to operate on DC voltage and pulsed DC voltage. For a reliable operation, make sure that also in DC emergency operation the LED driver is run within the specified conditions as stated in chapter "4.1 operating window".

Light output level in DC operation is 100 % (EOFi = 0.9).

The voltage-dependent input current of Driver incl. LED module is depending on the used load.

The voltage-dependent no-load current of Driver (without or defect LED module) is for:
AC: < 54.2 mA
DC: < 5.61 mA

6.4 Application Protection

This function allows to prevent access from the 4serviceAPP to the driver. Access to the driver with the deviceCONFIGURATOR via NFC is still possible.

7. Protective features

7.1 Overtemperature protection

The LED driver is protected against temporary thermal overheating.
If the temperature limit is exceeded the output current of the LED module(s) is reduced. The temperature protection is activated above tc max.
The activation temperature differs depending on the LED load.
On DC operation this function is deactivated to fulfill emergency requirements.

7.2 Short-circuit behaviour

In case of a short-circuit at the LED output the LED output is switched off.
After restart of the LED driver the output will be activated again.
The restart can be done via mains reset.

7.3 No-load operation

The LED driver will not be damaged in no-load operation. The output will be deactivated and is therefore free of voltage. If a LED load is connected the device has to be restarted before the output will be activated again.

7.4 Overload protection

If the maximum load is exceeded by a defined internal limit, the LED driver turns off the LED output. After restart of the LED driver the output will be activated again.
The restart can be done via mains reset.

7.5 Insulation between terminals

Insulation	Mains	PE	LED
Mains	–	basic	–
PE	basic	–	basic
LED	–	basic	–

basic ... represents basic insulation.

8. Miscellaneous

8.1 Insulation and electric strength testing of luminaires

Electronic devices can be damaged by high voltage. This has to be considered during the routine testing of the luminaires in production.

According to EN 60598-1 Annex Q (informative only!) or ENEC 303-Annex A, each luminaire should be submitted to an insulation test with 500 V DC for 1 second. This test voltage should be connected between the interconnected phase and neutral terminals and the earth terminal.
The insulation resistance must be at least 2 MΩ.

As an alternative, EN 60598-1 Annex Q describes a test of the electrical strength with 1500 V AC (or 1.414 x 1500 V DC). To avoid damage to the electronic devices this test must not be conducted.

8.2 Conditions of use and storage

Humidity:	5 % up to max. 85 %, not condensed (max. 56 days/year at 85 %)
Storage temperature:	-40 °C up to max. +80 °C

The devices have to be acclimatised to the specified temperature range (ta) before they can be operated.

The LED driver is declared as inbuilt LED controlgear, meaning it is intended to be used within a luminaire enclosure.
If the product is used outside a luminaire, the installation must provide suitable protection for people and environment (e.g. in illuminated ceilings).

8.3 Maximum number of switching cycles

All LED driver are tested with 50,000 switching cycles.
The actually achieved number of switching cycles is significantly higher.

8.4 Additional information

Additional technical information at www.tridonic.com → Technical Data

Lifetime declarations are informative and represent no warranty claim.
No warranty if device was opened.